Wabtec
Draft Systems Components
Catalog

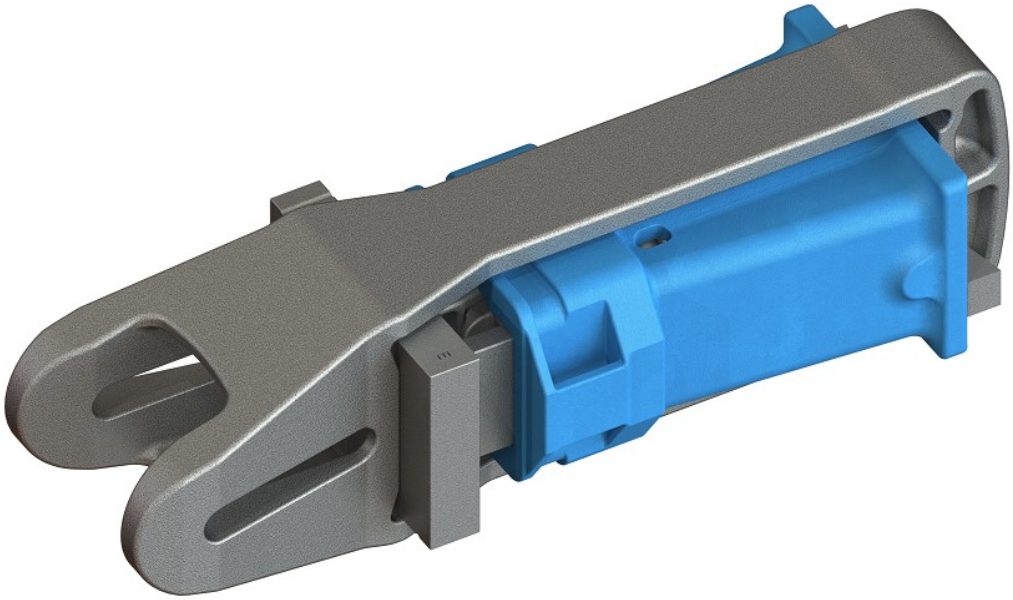

DG-66426
Revision A

Freight Car Draft Gears

Mark 50

All Steel Friction Draft Gear

24-5/8” pocket with 3-1/4” Travel

Car Type:	≤ 286K GRL
AAR Specification:	M-901E
AAR Rule:	Rule 21, Group J
AAR Rated Capacity:	38,940 ft-lbs.
Weight	386 lbs.
Part Number:	M-50
Part Number Serialized:	M-50S
Part Number Reconditioned:	RM-50
Drawing Number:	E-2796

Mark R500

Steel Friction Clutch & Steel/Rubber Spring Pack

24-5/8” pocket with 3-1/4” Travel

Car Type:	≤ 286K GRL
AAR Specification:	M-901E
AAR Rule:	Rule 21, Group J
AAR Rated Capacity:	44,000 ft-lbs.
Weight	376 lbs.
Part Number:	R500
Part Number Reconditioned:	RR500
Drawing Number:	E-2830

Freight Car Draft Gears

Mark 70E

All Steel Friction Draft Gear

24-5/8” pocket with 3-1/4” Travel

Car Type:	≤ 286K GRL
AAR Specification:	M-901E
AAR Rule:	Rule 21, Group J
AAR Rated Capacity:	42,193 ft-lbs.
Weight	312 lbs.
Part Number:	M-70E
Part Number Serialized:	M-70E-S
Part Number Reconditioned:	RM-70E
Drawing Number:	DG-66084

Mark 90AT

Steel Friction Clutch & Polymer Spring Pack

24-5/8” pocket with 3-1/4” Travel

Car Type:	≤ 286K GRL
AAR Specification:	M-901E
AAR Rule:	Rule 21, Group J
AAR Rated Capacity:	46,265 ft-lbs.
Weight	265 lbs.
Part Number:	M-90AT
Part Number Reconditioned:	RM-90AT
Drawing Number:	DG-22000

Freight Car Draft Gears

Mark 558

All Steel Friction Draft Gear

24-5/8” pocket with 3-1/4” Travel

Car Type:	≥ 286K GRL
AAR Specification:	M-901G
AAR Rule:	Rule 21, Group K
AAR Rated Capacity:	5.58 MPH
Weight	363 lbs.
Part Number:	M-558
Part Number Reconditioned:	RM-558
Drawing Number:	DG-66004

Freight Car Draft Gears

TF-880-Reconditioned

Steel Friction Clutch & Polymer Spring Pack

24-5/8” pocket with 3-1/4” Travel

Car Type:	≤ 286K GRL
AAR Specification:	M-901E
AAR Rule:	Rule 21, Group J
AAR Rated Capacity:	46, 883 ft-lbs.
Weight	270 lbs.
Part Number Reconditioned:	RTF-880
Drawing Number:	DG-66239

Crown SE-Reconditioned

Steel Friction Clutch & Polymer Spring Pack

24-5/8” pocket with 3-1/4” Travel

Car Type:	≤ 286K GRL
AAR Specification:	M-901E
AAR Rule:	Rule 21, Group J
AAR Rated Capacity:	38,831 ft-lbs.
Weight	359 lbs.
Part Number Reconditioned:	RCROWN-SE
Drawing Number:	DG-66263

Freight Car Rubber Draft Gear

Mark 368F

Rubber Draw Gear-Short Yoke/Pocket

368mm pocket with 2-1/4” Travel

Car Type:	International
Front Follower Type:	F-Type
Pre-Load:	10,000-15,000 lbf
Static Travel @ 500,000 lbf	2”
Static Travel @ 800,000 lbf	2-1/4”
Dynamic Capacity @ 500,000 lbf	
Dynamic Capacity @ 800,000 lbf	
Weight	230 lbs.
Part Number:	M368F
Part Number Reconditioned:	RM368F
Drawing Number:	DG-66419-CRD

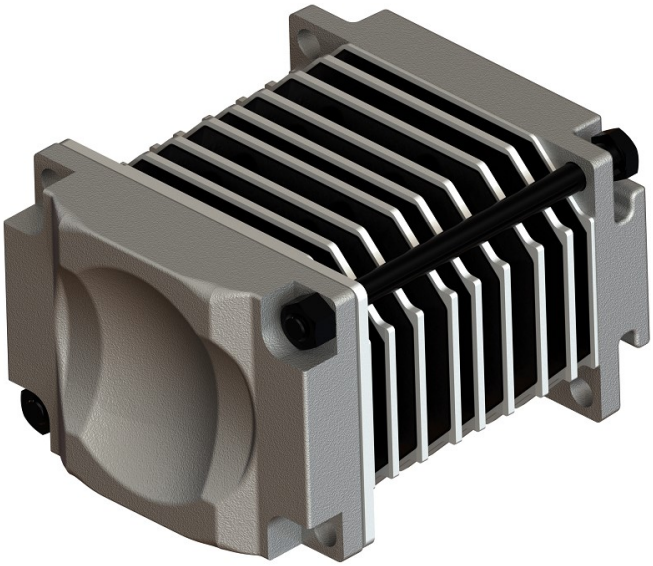

Freight Car Draw Pack

Mark 750

Rubber Draw Gear

24-5/8” pocket with 3/4” Travel

Car Type:	Drawbar Cars
Front Follower Type:	E-Type
Pre-Load:	45,500-50,000 lbf
Static Travel @ 500,000 lbf	1/2”
Static Travel @ 800,000 lbf	3/4”
Dynamic Capacity @ 500,000 lbf	10,000 ft-lbs.
Dynamic Capacity @ 800,000 lbf	15,000 ft-lbs.
Weight	340 lbs.
Part Number:	M-750
Part Number Reconditioned:	RM-750
Drawing Number:	DG-66380-CRD

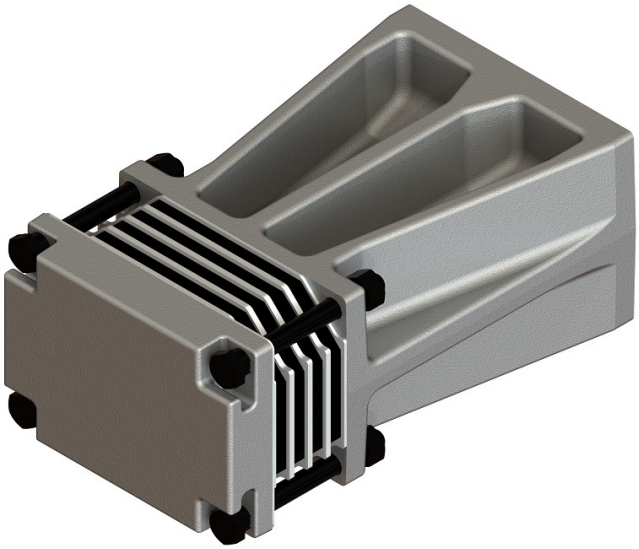

Mark 238F

Rubber Draw Gear-Short Yoke/Pocket

238mm pocket with 19mmTravel

Car Type:	Drawbar Cars
Front Follower Type:	F-Type
Pre-Load:	45,000-55,000 lbf
Static Travel @ 500,000 lbf	1/2”
Static Travel @ 800,000 lbf	3/4”
Dynamic Capacity @ 500,000 lbf	10,000 ft-lbs.
Dynamic Capacity @ 800,000 lbf	15,000 ft-lbs.
Weight	195 lbs.
Part Number:	M238F
Part Number Reconditioned:	RM238F
Drawing Number:	DG-66416-CRD

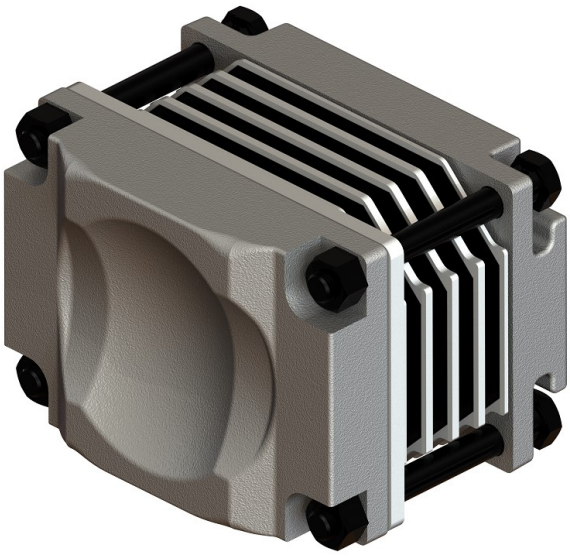

Freight Yokes

SY40AE

Type E Yoke

AAR Specification:	M-211
Pocket Size:	24-5/8”
Weight	210 lbs.
Part Number:	DG-66093
Drawing Number:	DG-66093-CRD

SY40AE

Type E Yoke

AAR Specification:	M-211
Pocket Size:	24-5/8”
Weight	210 lbs.
Part Number:	WRSY40AEX
Drawing Number:	WRSY40AEX

W3788AE

Type E Yoke

AAR Specification:	M-211
Pocket Size:	17-1/2”
Weight	194 lbs
Part Number:	W3788AE
Drawing Number:	W3788AE

Freight Yokes

Y45AE

Type F Yoke

AAR Specification:	M-211
Pocket Size:	24-5/8”
Weight	245 lbs.
Part Number:	WRY45AE
Drawing Number:	WRY45AE

Freight Follower Blocks

Y44A

Type E Follower Block

AAR Specification:	S-119
Weight	70 lbs.
Part Number:	WRY44A
Drawing Number:	WRY44A

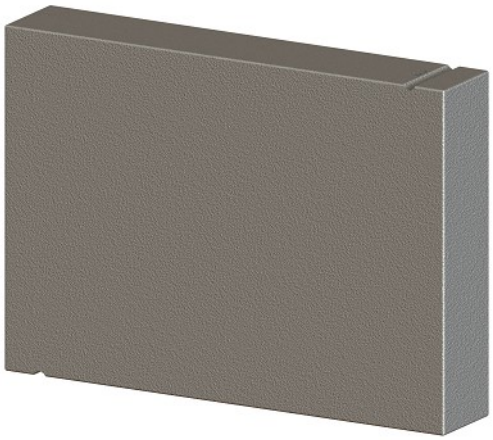

Y46AE

Type F Follower Block

AAR Specification:	M-211
Weight	74 lbs.
Part Number:	WRY46AE
Drawing Number:	WRY46AE

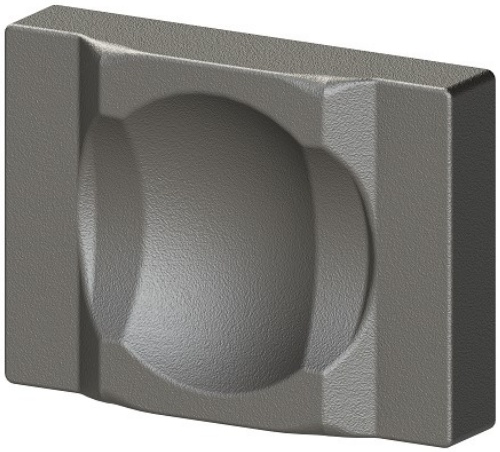

Freight Draft Gear / Yoke / Follower Kits & Assemblies

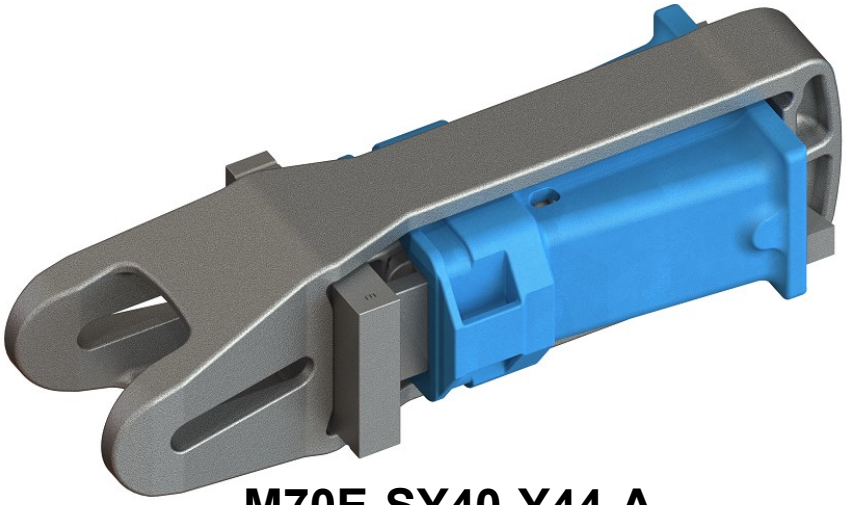

M70E-SY40-Y44-A

Draft Gear
Yoke
Follower
Assembled

Mark 50, 558, & R500, Draft Gear Kits

Type E & F

Available as Parts Kits and Pre-Assembled Units	
Part Numbers:	See Example Above
Drawing Number:	SK-66088-CRD

Mark 70 Draft Gear Kits

Type E & F

Available as Parts Kits and Pre-Assembled Units	
Part Numbers:	See Example Above
Drawing Number:	SK-66089-CRD

Freight Draft Gear Installation / Removal

HydroJack II

Draft Gear Removal Device

Operating Instructions & Parts Manual:	DG-66235
Draft Gear Safety Handling & Inspection Manual:	DG-66220

Description:	Part Number:	Drawing Number:
HydroJack II Kit w/ Hand Pump	HJ-II-AA	DG-66308
HydroJack II Kit w/o Pump	HJ-II-AB	DG-66308-1
HydroJack II Kit w/ Air/Hydraulic Pump	HJ-II-AC	DG-66308-2
HydroJack Adapter Assembly, F-Type	F-1453	F-1453
HydroJack Adapter Assembly, National/M&T Rotary	DG-66309	DG-66309
HydroJack Adapter Assembly, ASF Rotary	DG-66310	DG-66310
HydroJack Ram Assembly	G-955	G-955
HydroJack Ram Parts Diagram		E-3148

Shortening Pins

For Draft Gear Installation

Draft Gear Pinning Specification:	SK-66376

Description:	Part Number:	QTY. Per Gear:
Mark 50, 70E, 558, R500	H-1180	2
Mark 50, 70E, 558, R500 ,Recon, Housing Pre-1965	DG-66013	2
Mark 90 & Miner TF-880	DG-66176	3
Miner Crown SE/SG/TG, New & Recon, Housing Hole ø3/4”	DG-66178	4
Miner Crown SE/SG/TG, Recon, Housing Hole ø5/8”	DG-66177	4

Locomotive Draft Gears

Mark 390

Yoke/Follower/Rubber Draft Gear

13-3/4” pocket with 1-1/2” Travel

Car Type:	Locomotive
Coupler Type:	E, F, & H
Capacity:	35,000 ft-lbs. @ 1 million lbs.
Weight	1,200 lbs.
Part Number New:	390
Part Number Remanufactured:	RM390
Part Number Reconditioned:	R390
Drawing Number:	DG-66353

Mark 391

Yoke/Follower/Rubber Draft Gear

13-3/4” pocket with 1-1/2” Travel

Car Type:	Locomotive
Coupler Type:	E, F, & H
Capacity:	35,000 ft-lbs. @ 1 million lbs.
Weight	
Part Number New:	NA
Part Number Remanufactured:	RM391
Part Number Reconditioned:	R391
Drawing Number:	DG-66436

Locomotive Draft Gears

Mark 295E

Type E followers and Rubber Pack

11-5/8” pocket with 1-5/8” Travel

Car Type:	Locomotive
Coupler Type:	E, F, & H
Pre-Load:	15,000-20,000 lbf
Static Travel @ 500,000 lbf	1-1/2”
Static Travel @ 800,000 lbf	1-5/8”
Dynamic Capacity @ 500,000 lbf	
Dynamic Capacity @ 800,000 lbf	
Weight	192 lbs
Part Number New:	295E
Part Number Remanufactured:	RM-295E
Part Number Reconditioned:	R-295E
Drawing Number:	DG-66430

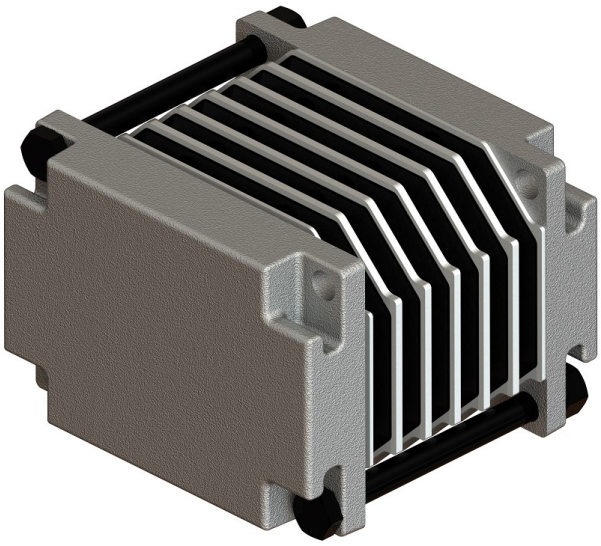

DG-66434

Switcher Yoke with Mark 295E Draft Gear

11-5/8” pocket with 1-5/8” Travel
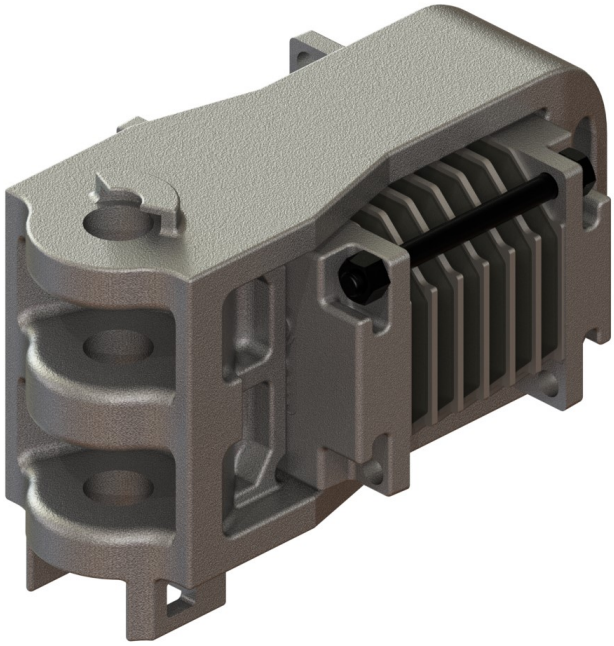
Car Type:	Locomotive
Coupler Type:	E, F, & H
Pre-Load & Capacity:	See Mark 295E
Weight	
Part Number New:	NA
Part Number Remanufactured:	
Part Number Reconditioned:	
Drawing Number:	DG-66434